8890001
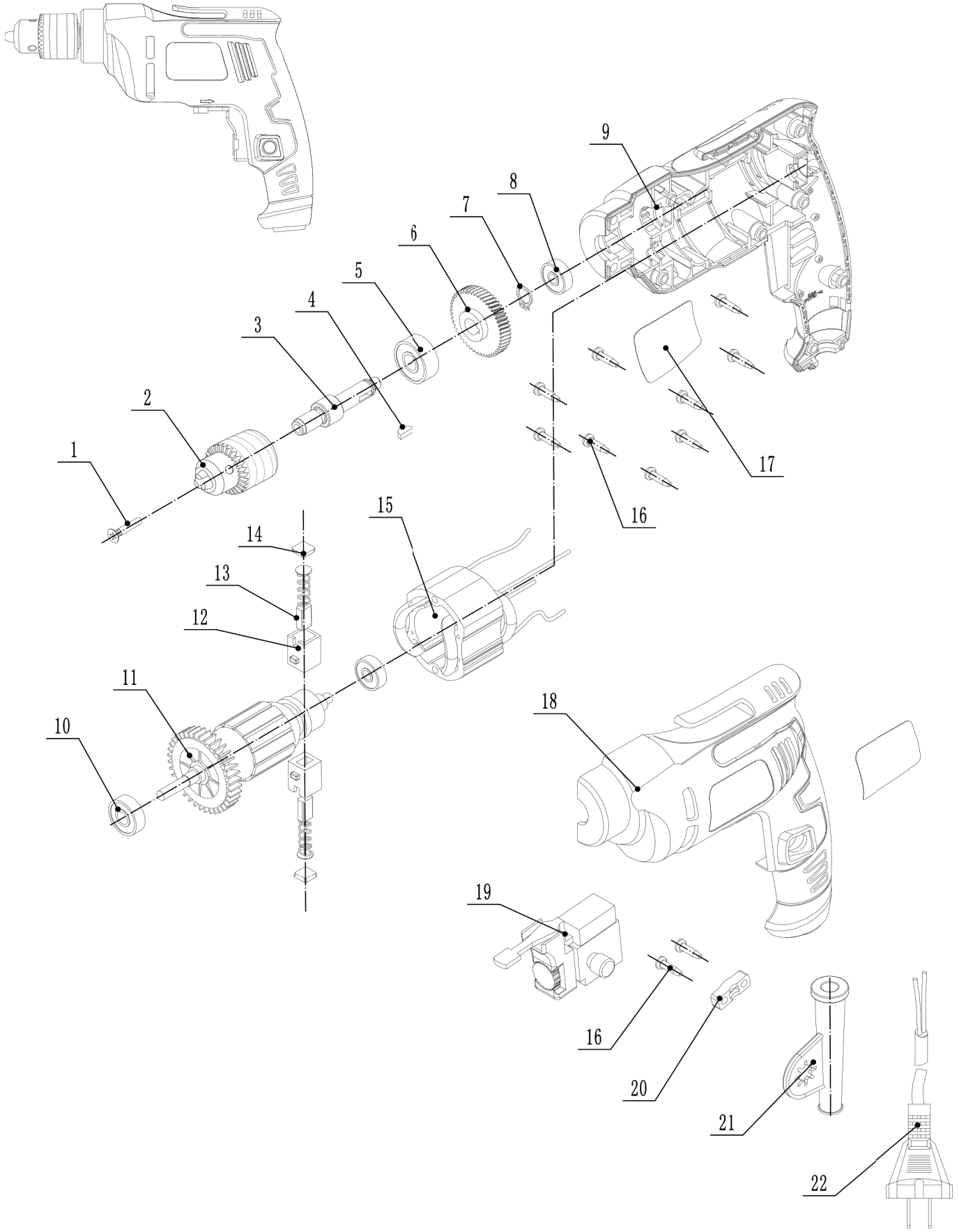
EXTOL® PREMIUM